LOAD CELLS SIGNAL CONDITIONER

EMS170

Operating instructions

R01

Contens

1. Safety instructions 2
2. Mechanical mounting 2
3. Electrical connection 2
4. Signal conditioner configuration 4
5. Examples of connection of force sensors to the EMS170 signal conditioner 6
6. Calibration 8
7. Troubleshooting 9

1. Safety instructions

The EMS170 can only be used under the conditions specified in this manual. It is designed for installation in a dry environment and in a closed metal cabinet, e.g. in the switchboard.

2. Mechanical mounting

The signal conditioner is mounted on a 35 mm DIN rail. The working position of the transmitter is (due to cooling) vertical, a free space of at least 1 cm must be left around the transmitter. Installation near contactors and other high-current devices is not recommended, especially due to the interference caused by such devices.

3. Electrical connection

The block diagram of the signal conditioner also with the connected force sensor is shown in fig. 1. The diagram shows a connection with a constant supply voltage to the sensor, which is used with standard strain gauges. A sensor with a 4-core or 6-core cable can be connected to the converter, then we speak of a 4-wire or 6-wire technique. The difference is that with a 6-wire connection, the resistance of the supply wires is compensated. It is therefore a more accurate method of measurement than with a 4-wire connection. However, it is of practical importance only for very accurate measurements, e.g. in metrology or where a very long cable is used between the sensor and the transmitter (more than 15 m).

1 to 4 sensors can be connected to the signal conditioner. For several sensors, these connections are first connected in parallel (in a separate box) and then connected to the signal conditioner. The connecting cable should have a larger cross-section, at least 0.14 mm^2.

A detailed description of the converter terminals is in tab. 1.

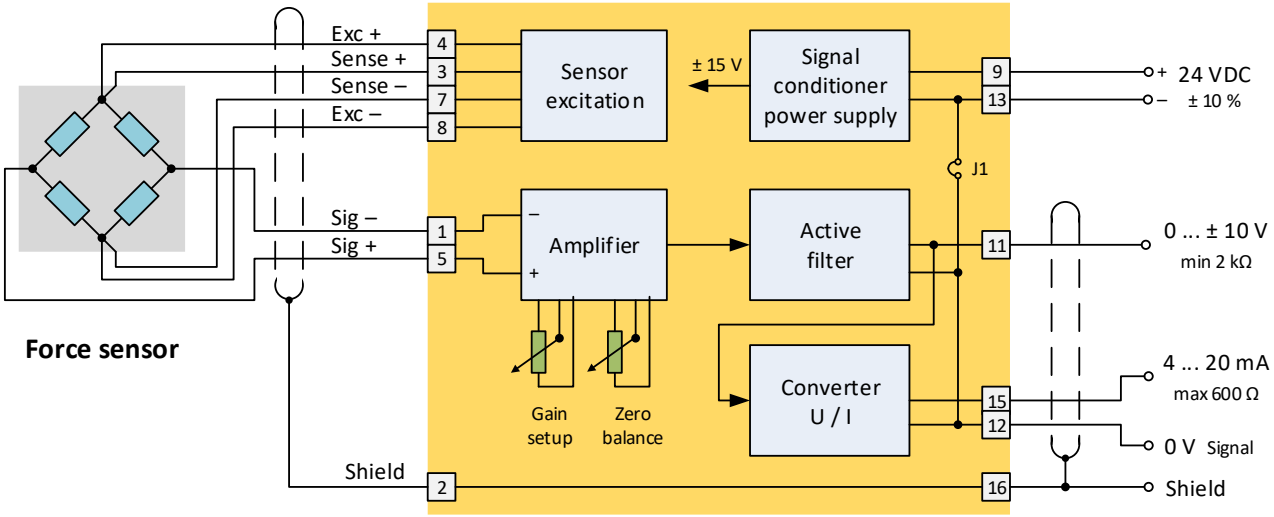

Fig. 1. Block diagram of the EMS170

Tab. 1. Inputs and outputs description of the EMS170. Wire colors only apply to EMSYST sensors.

Terminal number	Signal name	Description
1	Signal –	Negative sensor output, green wire color
2	Shield	The shield of the sensor cable is connected to the terminal
3	Sense +	Exc + supply wire resistance compensation. For sensors with a 4-wire cable, the terminal is not connected.
4	Exc +	Positive sensor supply voltage. Depending on the setting, the size is 5 V or 10 V to terminal 8 (Exc –). White wire color.
5	Signal +	Positive sensor output, yellow wire
6		
7	Sense –	Exc – supply wire resistance compensation. For sensors with a 4-wire cable, the terminal is not connected.
8	Exc –	Negative sensor supply voltage. It has a value of + 2.5 V to terminal 12 (analog ground).
9	Vcc	Supply voltage + 24 VDC ± 10%
10		
11	Uout	Voltage output, range - 10 ... + 10 V, min load resistance 2 kΩ
12	AGND	Analog ground. When jumper J1 is ON, this terminal is connected with terminal 13 (power ground).
13	GND	Power ground
14		
15	Iout	Current output 4 ... 20 mA. Max load resistance is 600 Ω
16	Shield	The shield of the output cable is connected to the terminal

4. Signal conditioner configuration

Using the switches, the signal conditioner can be set for different types of sensors and different applications. Specifically, you can set:

- sensor supply method (voltage or current)
- voltage or current supply range
- sensor sensitivity (gain range),
- filter frequency range.

The parameters are set using DIP switches on the printed circuit board. Before adjusting, push the catches on the sides of the upper part of the converter (e.g. with a screwdriver) and remove the printed circuit board. The location of the switches on the board is shown in fig. 2, an overview of all settings is in tab. 2.

Fig. 2. Location of the jumper and DIP switches on the printed circuit board

Tab. 2. DIP switch setting

Function of DIP switch	Setup of DIP switch
S1 – 4 Excitation of load cell:	
- constant voltage excitation	S1 – 4 = OFF
- constant current excitation	S1 – 4 = ON
S1 – 1, 2, 3 Range of voltage excitation (S1 – 4 = OFF!) :	
- bridge voltage excitation + 10 V	S1 – 1 = OFF, S1 – 2 = OFF, S1 – 3 = OFF
- bridge voltage excitation + 5 V	S1 – 1 = ON, S1 – 2 = OFF, S1 – 3 = ON
S1 – 1, 2, 3 Range of current excitation (S1 – 4 = ON!):	
- Current excitation 10 mA (Max resistance of load cell 1000 Ω!)	S1 – 1 = ON, S1 – 2 = ON, S1 – 3 = OFF
- Current excitation 20 mA (Max resistance of load cell 375 Ω!)	S1 – 1 = ON, S1 – 2 = OFF, S1 – 3 = OFF
- Current excitation 40 mA (Max resistance of load cell 63 Ω!)	S1 – 1 = ON, S1 – 2 = OFF, S1 – 3 = ON
S2 Sensitivity of load cell adjustment:	
- 0,5 mV/V	S2 – 1 = ON, S2 – 2 = ON
- 1,0 mV/V	S2 – 1 = OFF, S2 – 2 = ON
- 1,5 mV/V	S2 – 1 = ON, S2 – 2 = OFF
- 2,0 mV/V	S2 – 1 = OFF, S2 – 2 = OFF
S3 Range of active frequency filter:	
- 4 Hz	S3 – 1 = OFF, S3 – 2 = OFF, S3 – 3 = ON, S3 – 4 = ON
- 40 Hz	S3 – 1 = ON, S3 – 2 = ON, S3 – 3 = OFF, S3 – 4 = OFF
- 400 Hz	S3 – 1 = ON, S3 – 2 = ON, S3 – 3 = ON, S3 – 4 = ON

Configuration notes.

Jumper J1. The signal conditioner is delivered with connected supply and signal ground (jumper J1 = ON). We recommend that you keep this configuration, it works in most cases. The jumper J1 should be removed to suppress interference by galvanic separation of the supply voltage and signal ground. However, the removing J1 alone will not usually solve the problem, often will make it worse. Other techniques should also be used, e.g. enclosing the converter in an all-metal housing, additional cable shielding, etc. You can read more about the interference suppression problem on the manufacturer's website.

Sensor power supply method. The sensor can be supplied with constant voltage or constant current. When using standard strain gauge sensors, the constant voltage supply must always be set. The current excitation of the sensor is used only exceptionally, in special cases.

Voltage excitation range. When setting the sensor supply with a constant voltage, a voltage of 10 V or 5 V can be selected. A higher supply voltage is more advantageous because the signal at the output of the sensor is larger. However, with smaller sensors, the current flowing through the sensor may heat it up, causing additional temperature error. When using EMSYST sensors, we recommend setting the voltage to 5 V only for aluminium types, e. g. for EMS20 - 50, 100, 200 and 500 N and EMS30 - 100, 200 and 500 N. For all other types we recommend the supply voltage of the sensor set to 10 V.

Current excitation range. The current through the sensor can be set to 10, 20 or 40 mA. When supplying current, the resistance of the sensor must be taken into account. It must not be greater than given in tab. 2. The connection of the sensor is different from the voltage supply - see fig. 5.

Sensor sensitivity (gain range). The gain of the transmitter must be adapted to the connected sensor so that the required signal 0 ... 10 V or 4 ... 20 mA is always required at the output. The sensitivity of the connected sensor can be set directly on the transmitter using switch S2. Recommended settings for EMSYST sensors are in tab. 3.

Filter frequency range. The transmitter has a built-in low-pass Butterworth 2nd order filter which can be set to a frequency range of 4, 40 or 400 Hz. The lower the frequency is set, the better the signal is filtered and the more stable the output. A typical example is weighing. However, if a fast dynamic measurement is required, the filter must be set to a higher frequency to avoid signal delay. For example, when the transducer is engaged in the feedback of the control circuit. The filter is set using switch S3.

Factory settings. The manufacturer supplies the signal conditioner in the following configuration:

- Sensor power supply type: voltage
- Voltage supply range: 10 V
- Gain range (sensor sensitivity): 2 mV / V
- Filter frequency range: 40 Hz

Tab. 3. Recommended settings of the EMS170 for EMSYST sensors

Type of the sensor	**Nominal sensitivity of the sensor (mV/V)**	**Recommended excitation of the sensor (V)**	**Recommended setting of the signal conditioner (mV/V)**
EMS20 – 50, 100, 200, 500 N EMS30 – 100, 200, 500 N	1,0 1,0	5 S1-1 = ON, S1-2 = OFF, S1-3 = ON	1,0 S2-1 = OFF, S2-2 = ON
EMS20 – 1, 2, 5 kN EMS30 – 1, 2, 5 kN EMS40 EMS50 EMS70	1,5 1,5 1,5 1,5 1,5	10 S1-1 = OFF, S1-2 = OFF S1-3 = OFF	1,5 S2-1 = ON, S2-2 = OFF
EMS100 EMS150	2,0 2,0	10 S1-1 = OFF, S1-2 = OFF S1-3 = OFF	2,0 S2-1 = OFF, S2-2 = OFF

5. Examples of connection of force sensors to the EMS170 signal conditioner

The specified wire colors only apply to EMSYST sensors.

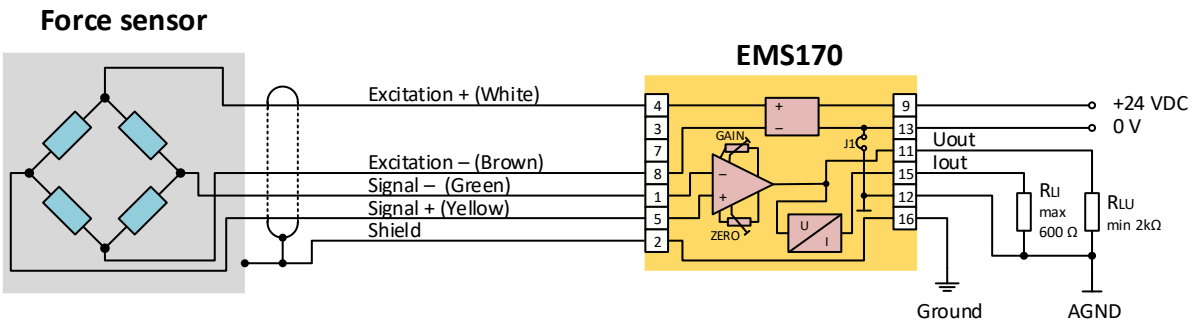

Fig. 3. Wiring diagram, 4 – wire technique

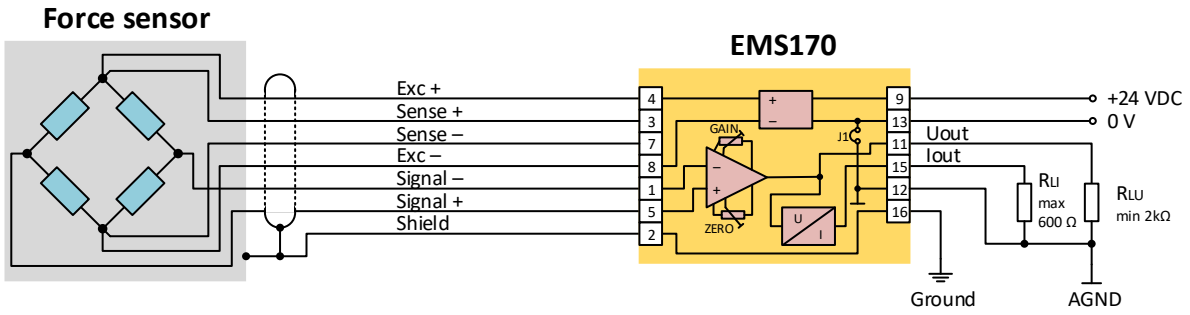

Fig. 4. Wiring diagram, 6 – wire technique

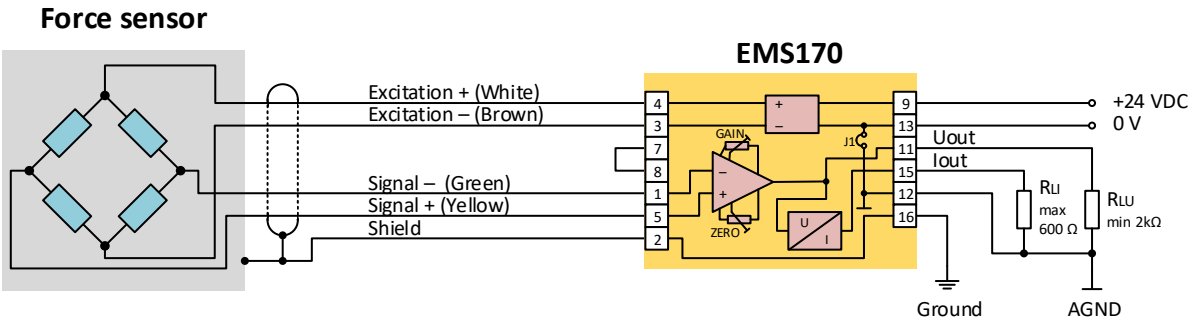

Fig. 5. Wiring diagram, current supply of the sensor

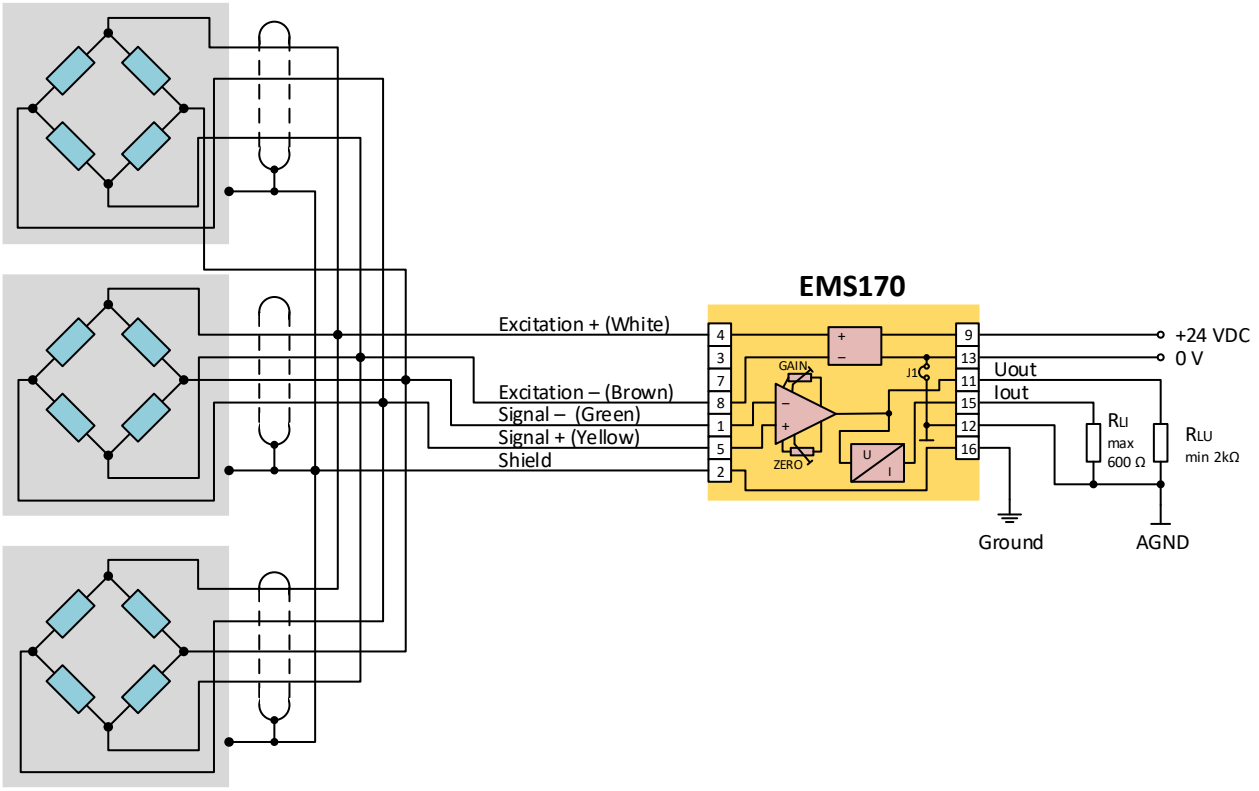

Fig. 6. Connection of 3 sensor, 4 – wire technique

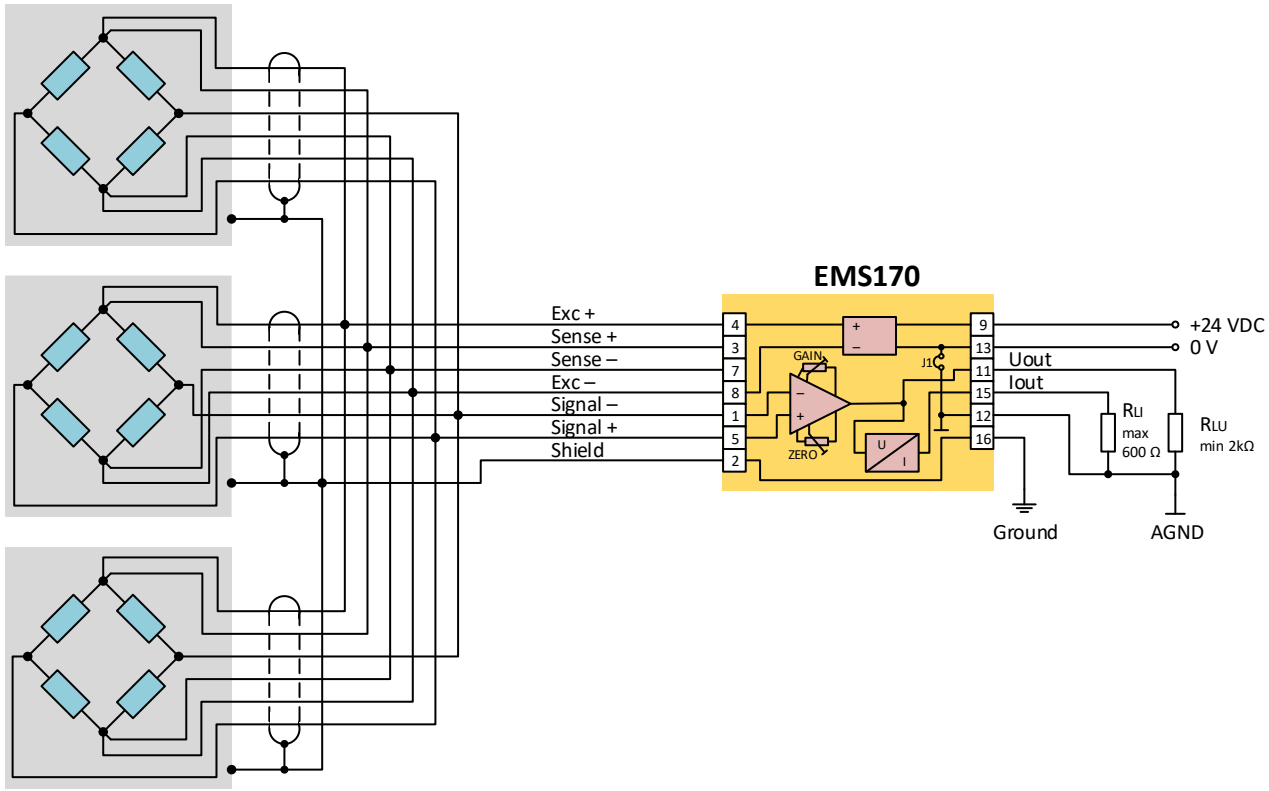

Fig. 7. Connection of 3 sensor, 6 – wire technique

6. Calibration

By calibration we mean the setting of the signal conditioner together with the connected force sensor so that there is a clear relationship between the force sensor load and the converter output signal. E. g. at a load force of 1 kN, the output voltage must be 10 V (or 20 mA). As an example, consider the force sensor EMS50-1kN connected to the EMS170 signal conditioner. Depending on whether we use a voltage or current output, we connect a voltmeter or milliammeter. (Note. The voltage and current output are active on the converter at the same time. However, only one of them can be set. This means that if we set voltage output, then the current output will not be set exactly. Conversely, if we set current output, the voltage output will not be set exactly.) The connection of the measuring system during calibration is shown in fig. 8.

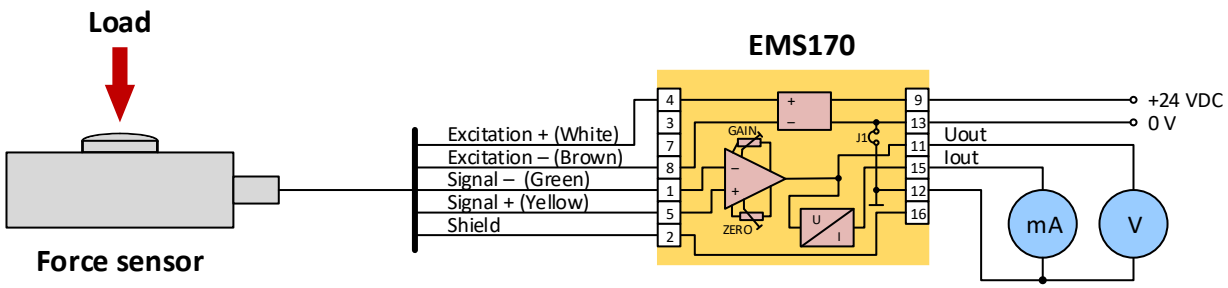

Fig. 8 Calibration wiring diagram

Calibration procedure

1. *Signal conditioner configuration*. Prior to calibration, the signal conditioner must be set up correctly - see section "Signal conditioner configuration".
2. *Zero setting*. Ensure that no force is applied to the sensor and then turn the "Zero" trimmer on the front panel of the converter until the control voltmeter shows 0 V (or a milliammeter of 4 mA).
3. *Gain adjustment*. Load the sensor with a force of 1 kN and turn the trimmer "Gain" until there is no voltage at the output of 10 V (or current of 20 mA).
4. *Checking*: After setting the gain, unload the sensor and check zero again. If it does not match, repeat points 2 and 3 until both zero and gain are set correctly.

Note on sensor load

If it is not possible to load the sensor with a nominal force value, e.g. it is very large, a smaller value can be used and the output can be recalculated. However, this reduces the accuracy of the calibration. Therefore, if possible, a force as close as possible to the nominal value should be used. Let's load the sensor with the force of 0.8 kN. The magnitude of the output voltage in this case should be:

$$Uout = \frac{0{,}8\ kN}{1\ kN} * 10V = 8{,}0\ V$$

If we set the current:

$$Iout = \frac{0{,}8\ kN}{1\ kN} * 16\ mA + 4\ mA = 16{,}8\ mA$$

7. Troubleshooting

If problems arise, the following steps, which have been designed on the basis of practical experience, should be tested. If they do not help, contact the supplier or manufacturer. We recommend that you follow the sequence of steps below.

1. *Wiring check*. Check the correct connection, the supply voltage (should be 24 V ± 10%) and the current consumption from the source (depending on the number of connected sensors, it should not exceed 200 mA). Measure the output of the converter with an external voltmeter or milliammeter - the problem may also be in the input circuits of the device that processes the signal.

2. *Check sensor power supply 1 (no load).* The excitation of the sensor is measured at terminals 4 and 8, according to the connection in fig. 9. The correct value is 5 V or 10 V (depending on the configuration) with a tolerance of ± 5 mV. If the voltage is not within this range, the signal conditioner is clearly damaged. Caution, terminal 8 is not connected to the ground of the transmitter. The potential of terminal 8 is 2.5 V ± 5 mV relative to terminal 12 (analog ground). It must also be measured.

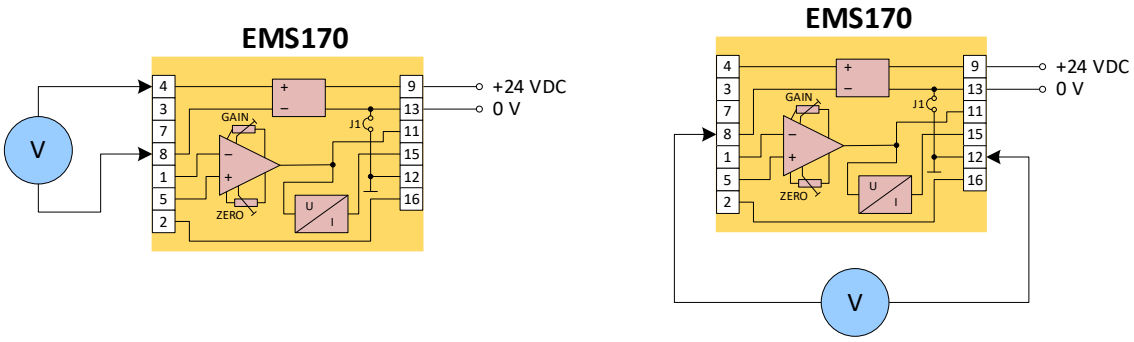

Fig. 9. Measurement of excitation of the sensor

3. *Check sensor power supply 2 (under load).* If the sensor excitation is measured according to the previous paragraph in order, it must also be measured with the sensor connected. It may happen that the error does not appear until after loading. The sensor is connected according to fig. 10 and measure the voltage at terminals 4 and 8 again. The voltage should not change, the original value of 5 or 10 V should remain. If the value changes (decreases), the fault is in the power supply part of the converter or the sensor may be damaged - it has a short circuit. In this case, the resistance of the sensor must be measured as described in the next step.

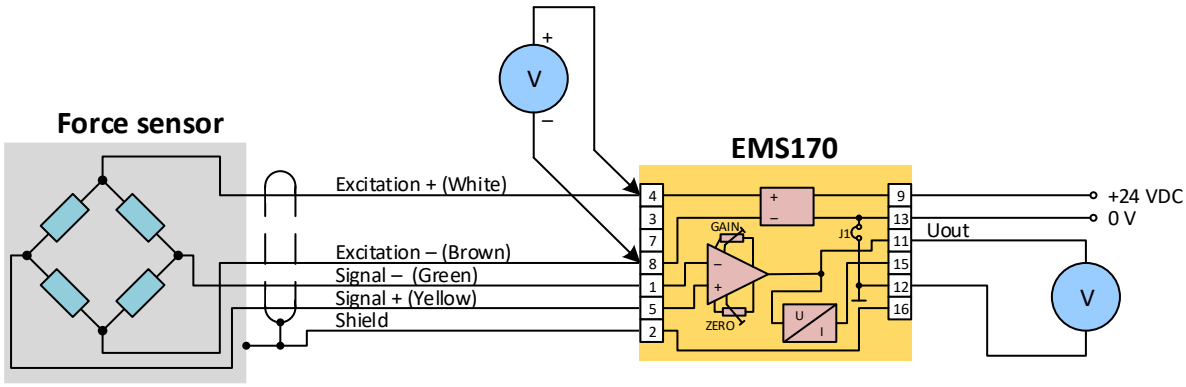

Fig. 10. Measurement of excitation of the sensor under load

4. *Check sensor resistance*. The resistance of the sensor is measured by an ohmmeter connected to the sensor wires - fig. 11. The exact value of the resistance should be seen in the datasheet of the sensor. Usually it is in the range from 350 to 400 Ω. If the sensor resistance is significantly lower, the signal conditioner is overloaded and the supply voltage may drop as a result. It is a sensor error. If the sensor resistance is within tolerance and the supply voltage is still reduced, the fault is in the signal conditioner. The input resistance must be measured between the Exc + and Exc – wires and also the output resistance, e. g. between the Signal + and Signal – wires. In fig. 11 only the measurement of the input resistance is plotted.

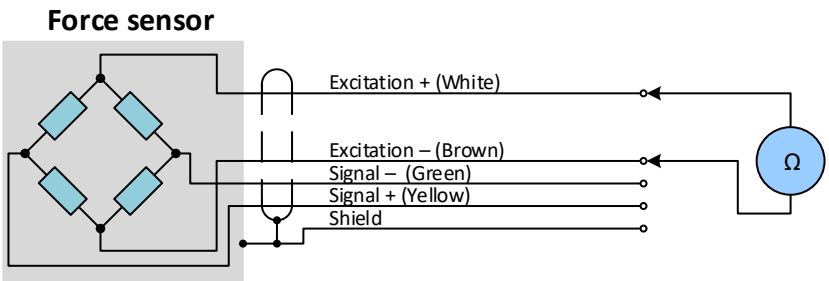

Fig. 11. Measurement of the resistance of the sensor

5. *Check the sensor output voltage*. Overload of the sensor is relatively common error and it is manifested by the fact that the output voltage of the unloaded sensor (which should theoretically be zero) exceeds the allowed tolerance. The voltage can be measured in the circuit according to fig. 12.

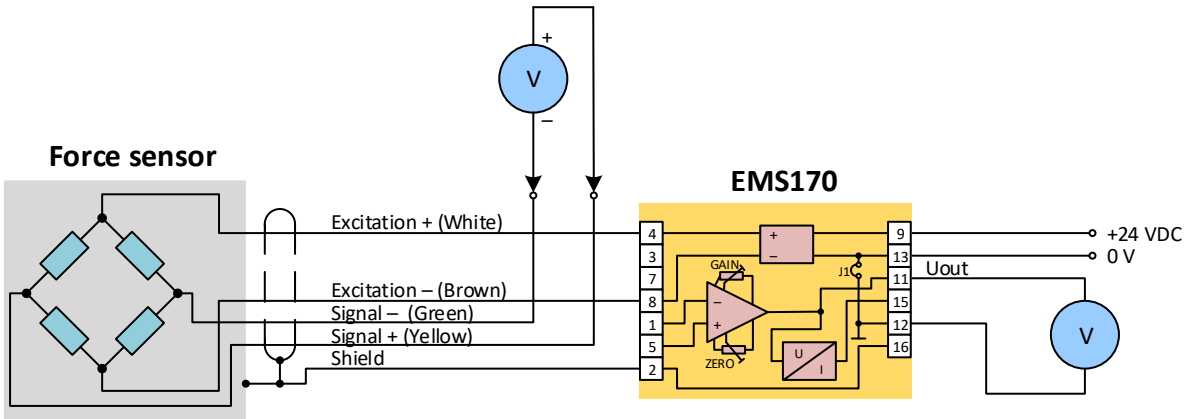

Fig. 12. Measurement the output voltage of the sensor

To assess the measurement results, it is necessary to know the parameters of the sensor and recalculate them correctly. Example. We have an EMS20 series sensor with a nominal sensitivity of 1.5 mV / V and a zero tolerance of 2% F.S. The supply voltage of the sensor on the EMS170 converter is 10V. The maximum voltage value with the sensor unloaded can be:

$$U_{SO} = 1{,}5\, mV/V * 10\, V * 2\, \% = 0{,}3\, mV$$

If we measure a voltage value greater than + 0.3 mV or less than – 0.3 mV, the sensor is most likely overloaded and the only way to repair it is to replace it with a new one. With this connection, the function of the sensor can also be tested by pushing it with your hand or a tool (pay attention to the range of the sensor to avoid damaging it). The output voltage should change, the magnitude of the change depends on the range of the sensor and the pushing force.